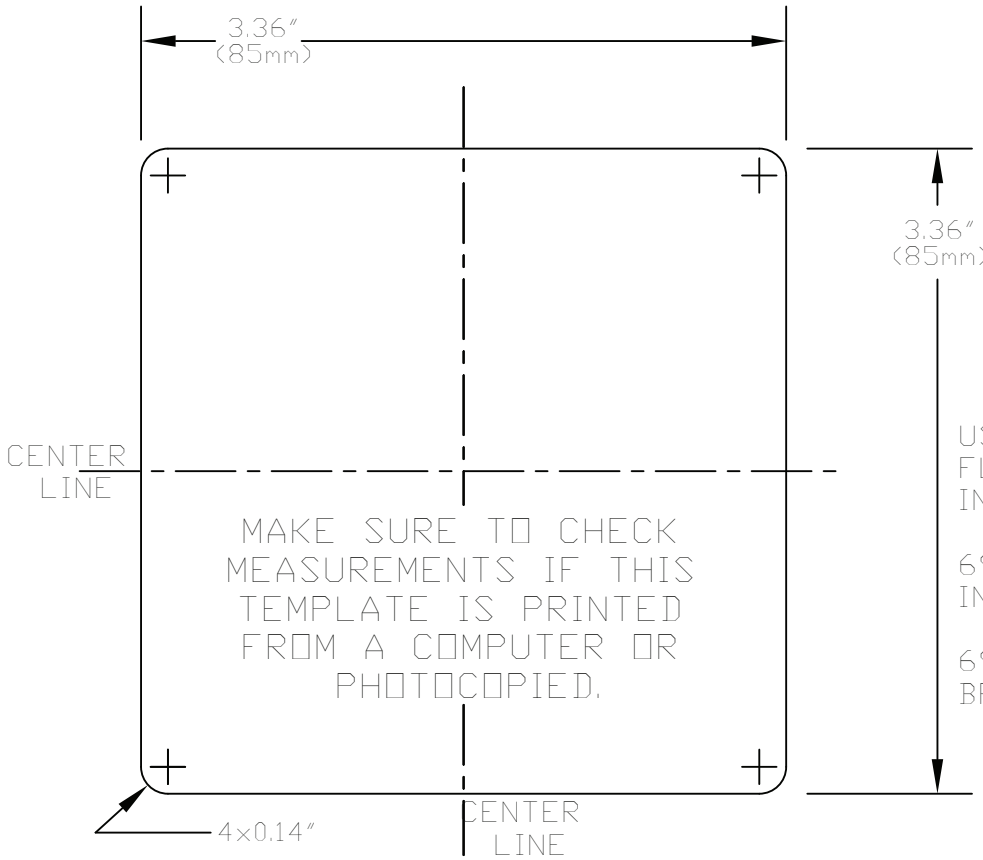

USE THIS TEMPLATE FOR FLUSH MOUNT DASH INSTALATION

69405K - REPLACEMENT INSTALATION HARDWARE

69229 - FLUSH MOUNT BRACKET

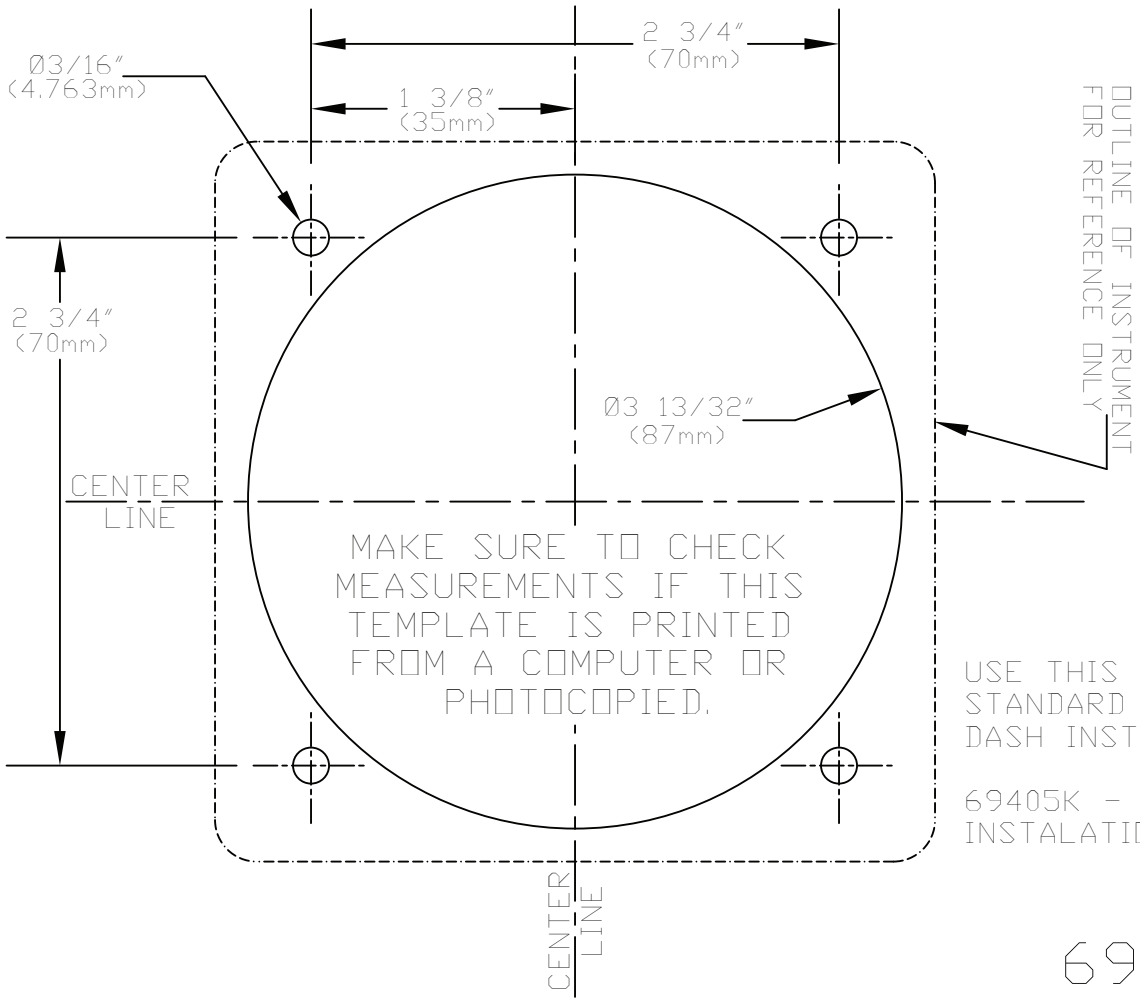

USE THIS TEMPLATE FOR STANDARD THROUGH THE DASH INSTALATION

69405K - REPLACEMENT INSTALATION HARDWARE

69849 R1